350 S. St. Charles St. Jasper, In. 47546
Ph. 812.482.2932 Fax 812.634.6632
www.ridetech.com

Part # 11163509
67-69 GM "F" Body Non Adjustable Front CoilOvers
For Use w/ StrongArms & RideTech Spindles

Shock Assembly:

2	24039999	3.6" stroke non adjustable shock
2	70008977	2.75" non adjustable threaded stud top
2	90001994	.625" I.D. bearing
4	90001995	Bearing snap ring

Components:

2	59080600	Coil spring – 8" long / 600 # rate
2	90002313	2.75" stud top base
2	90002222	Spring retainer kit
2	90001902	Aluminum cap for Delrin ball
2	90001903	Delrin ball upper half
2	90001904	Delrin ball lower half

Hardware:

2	99562003	9/16" SAE Nylok jam nut	Stud top hardware

COILOVER

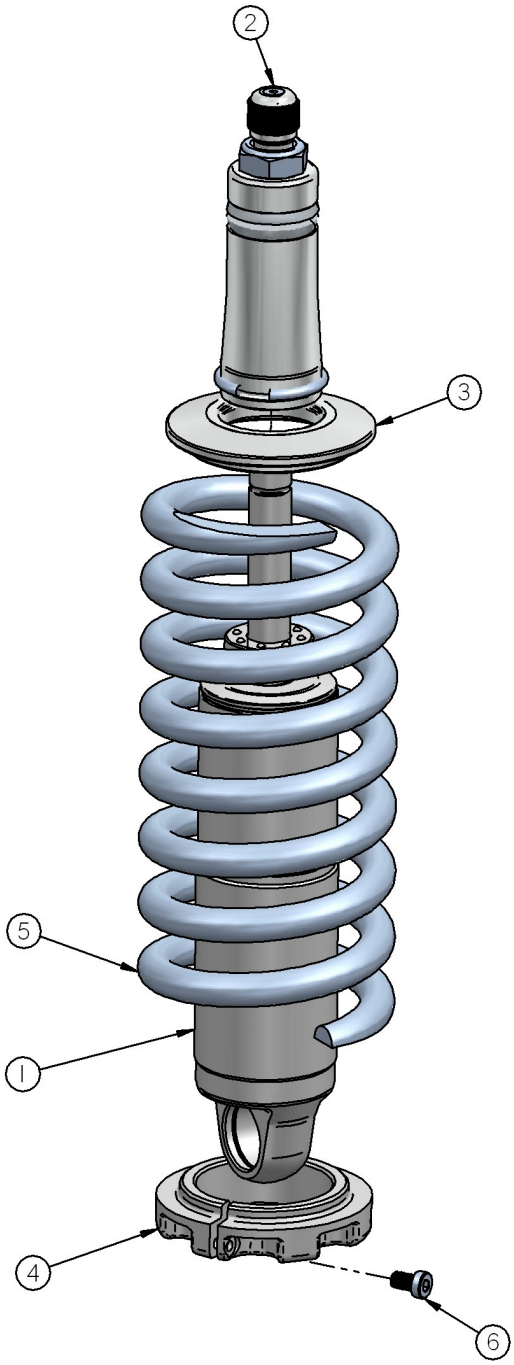

1. Impact Forged, Monotube shock
2. Rebound adjustment knob (SA Only)
3. Upper coil spring retainer
4. Lower coil spring retainer
5. High tensile coil spring
6. Set screw

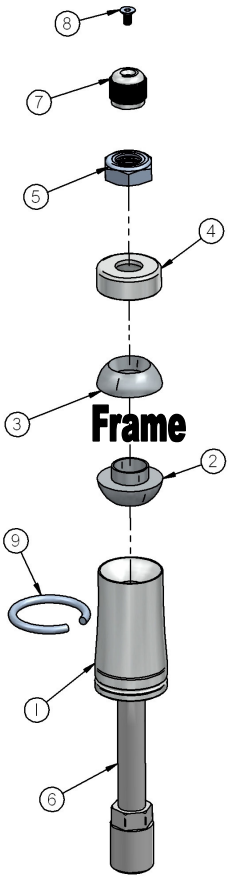

1. Stud top base
2. Lower Delrin ball half
3. Upper Delrin ball half
4. Aluminum cap
5. 9/16” Nylok jam nut
6. Threaded stud
7. Adjustment knob (SA Only)
8. Screw
9. Snap ring

COILOver

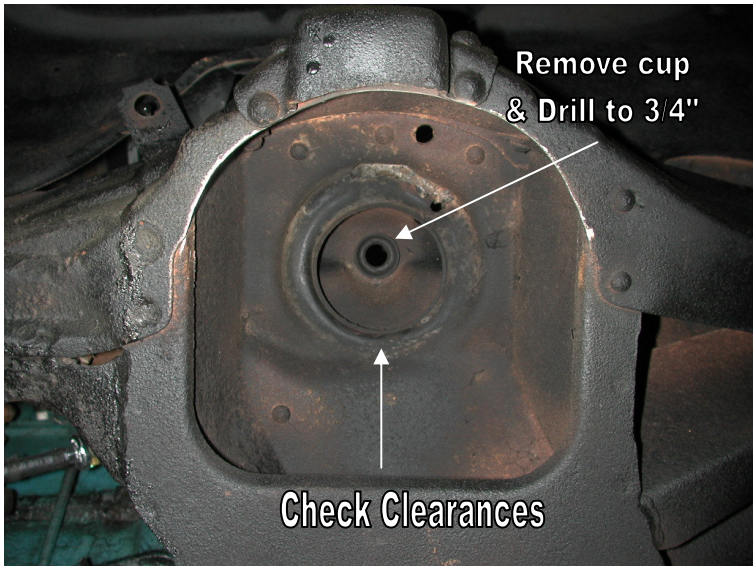

1. To allow the step in the lower Delrin ball half to slide into the factory shock hole, the bushing cup will need to be removed (if your car has one) and the hole may need to be drilled out to ¾".

2. Assemble the CoilOver then place into the coil spring pocket w/ the stud and lower Delrin ball sticking through the factory shock hole.

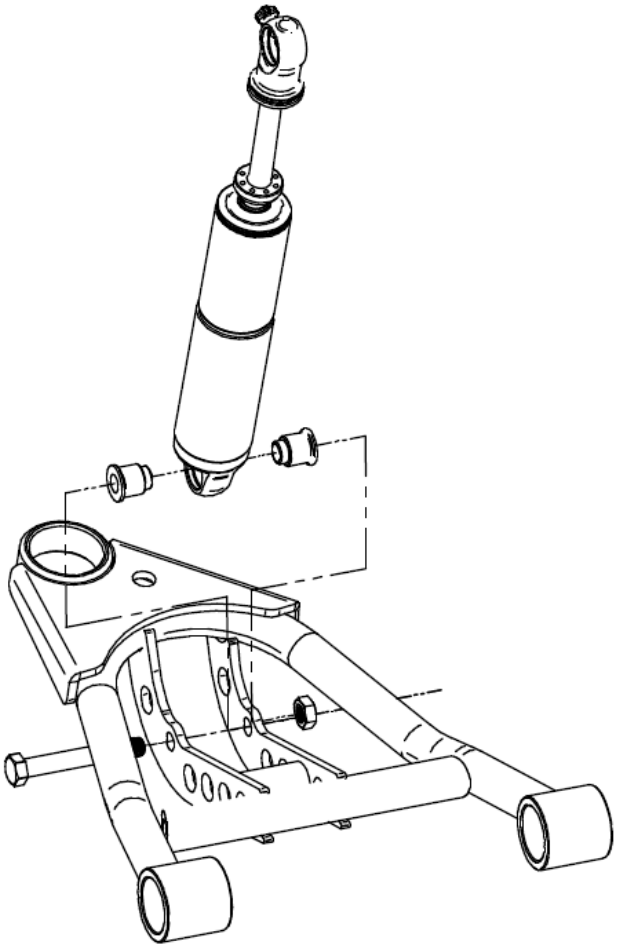

3. Check clearance between the upper factory spring retaining lip and stud top base. Allowing this to hit could cause the shock to break, this

4. Place the upper Delrin ball over stud, then the aluminum cap. Secure the assembly w/ the 9/16" Nylok jam nut.

5. Attach the bottom of the shock to the lower StrongArms using the spacers and hardware supplied w/ the arm.

Ride Height

We have designed most cars to have a ride height of about 2” lower than factory. To achieve the best ride quality & handling, the shock absorber needs to be at 40-60% overall travel when the car is at ride height. This will ensure that the shock will not bottom out or top out over even the largest bumps. Measuring the shock can be difficult, especially on some front suspensions. Measuring overall wheel travel is just as effective and can be much easier. Most cars will have 4-6” of overall wheel travel. One easy way to determine where you are at in wheel travel is to take a measurement from the fender lip (center of the wheel) to the ground. Then lift the car by the frame until the wheel is just touching the ground, re-measure. This will indicate how far you are from full extension of the shock. A minimum of 1.5” of extension travel (at the wheel) is needed to ensure that the shock does not top out. If you are more than 3” from full extension of the shock then you are in danger of bottoming out the shock absorber.

Adjusting Spring Height

When assembling the CoilOver, screw the spring retainer tight up to the spring (0 preload). After entire weight of car is on the wheels, jounce the suspension and roll the car forward and backward to alleviate suspension bind.

- If the car is too high w/ 0 preload then a smaller rate spring is required. Although threading the spring retainer down would lower the car, this could allow the spring to fall out of its seat when lifting the car by the frame.

- If the car is too low w/ 0 preload, then preload can then be added by threading the spring retainer up to achieve ride height. On 2.6” - 4” stroke shocks, up to 1.5” of preload is acceptable. On 5-7” stroke shocks, up to 2.5” of preload is acceptable. If more preload is needed to achieve ride height a stiffer spring rate is required. Too much preload may lead to coil bind, causing ride quality to suffer.