ridetech

Installation Instructions

Part # 11537196 - C2/C3 Corvette 9" Conversion

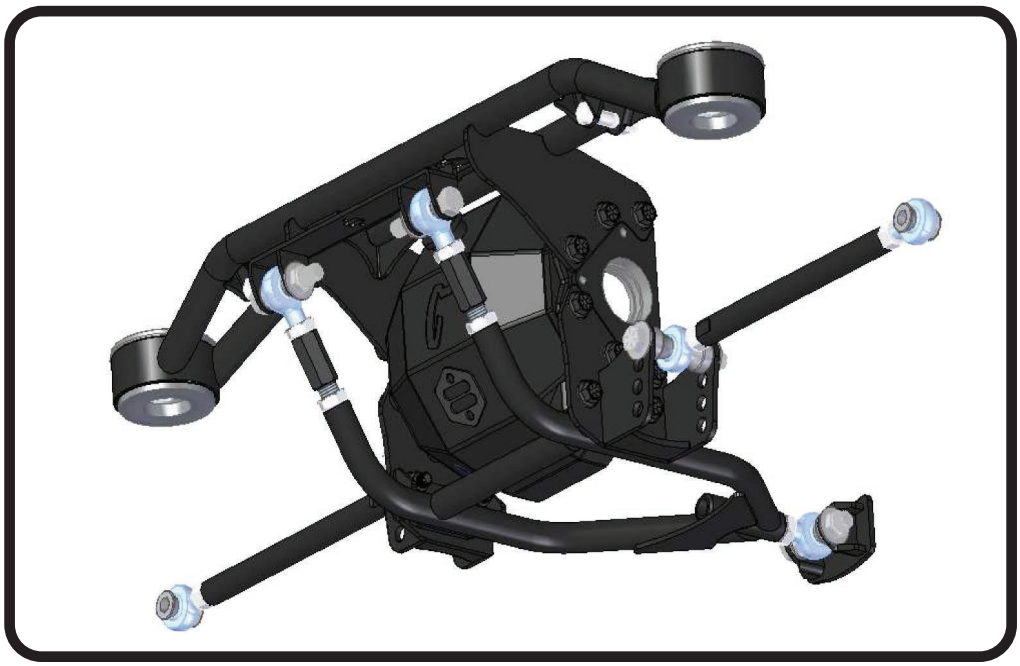

Recommended Tools

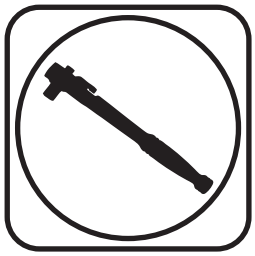

C2/C3 9" Conversion Kit

Installation Instructions

Table of contents

THIS KIT WILL NOT WORK WITH LEAF SPRING SUSPENSIONS.

www.ridetech.com

812-482-2932

Major Components .....In the box

Item #	Part #	Description	QTY
1	90003042	9" Housing	1
2	90003066	Stub Shafts (Not Shown)	2
3	90002574	Lower Side Bracket Assembly - Driver	1
4	90002575	Lower Side Bracket Assembly - Passenger	1
5	90002576	Rear Crossmember Bracket	1
6	90002577	Lower Cradle Assembly	1
7	90002578	Lower Cradle Front Mount	1
8	90002579	Upper Crossmember Assembly	1
9	90003120	Camber Rod	2
10	70013541	Camber Rod Inner Bearing Spacer - 5/8"ID x 1.320" (approx 1 5/16")	4
11	90002582	Heim End Coupler	2
12	90002583	Cradle Front Heim Spacers - 5/8" ID x 9/16" Long	2
13	90002168	Cradle Rear Heim Spacers 5/8" ID x 7/16" Long	4
14	70011824	Upper Cradle Bushings - Installed in Crossmember	2
15	70013564	R-Joint Housing - LH	2
16	70013364	R-Joint Housing - RH	2
17	90001589	3/4" Heim - RH	1
18	90001591	3/4" Heim - LH	2
19	70013545	Camber Rod Outer Bearing Spacer - 5/8"ID x 9/16""	4
20	70012909	Front Bracket Spacer - Not Shown	1
21	99752004	3/4"-16 Jam Nut - RH	5
22	99752006	3/4"-16 Jam Nut - LH	4
R-Joint Components - (Installed in Camber Rod Ends)			
	70013279	Retaining Ring	4
	70013280	Wavo Wave Spring	4
	70013275	Center Pivot Ball	4
	70013276	Composite Cage	4

New R-Joints will be quite stiff (75-90 in/lbs breakaway torque) until they "break in" after a few miles of use. After the break in period they will move much more freely. Because the composite bearing race contains self lubricating ingredients, no additional lubrication is needed or desired. Any additional lubrication will only serve to attract more dirt and debris to the R-Joint and actually shorten its life.

Hardware List .....In the box

Item #	QTY	Part Number	Description	Useage
23	5	99371014	3/8"-24 x 1 1/4" Hex Bolt	3rd Member to Center Section - Not Shown
24	10	90002275	3/8" Copper Flat Washer	3rd Member to Center Section - Not Shown
25	6	99371053	3/8"-16 x 3/4" Hex Bolt	Axle Flange Retainer - Not Shown
26	12	99501040	1/2"-13 x 3/4" Hex Bolt	Center Section to Cradle
27	4	99501039	1/2"-13 x 1 1/2" Hex Bolt	Center Section to Cradle
28	4	99502014	1/2"-13 Nylok Nut	Center Section to Cradle - Not Shown
29	8	99431018	7/16"-20 x 1 1/4" Hex Bolt	OUTER Half Shaft Bolts - Not Shown
30	8	99431019	7/16"-20 x 1" Hex Bolt	INNER Half Shaft Bolts - Not Shown
31	16	99433007	7/16" Nord-Lock Washer	Half Shaft Bolts - Not Shown
32	1	99620108	5/8"-18 x 3 1/4" Hex Bolt	Cradle To Car - Front Heim
33	3	99623001	5/8" Flat Washer	Cradle To Car
34	3	99322001	5/8"-18 Nylok Nut	Cradle To Car
35	2	99435006	7/16"-20/14 x 3" stud	Upper Crossmember to Car - Not Shown
36	2	99432002	7/16"-20 Nylok Nut	Upper Crossmember to Car - Not Shown
37	2	99433005	7/16" Flat Washer	Upper Crossmember to Car - Not Shown
38	2	99621019	5/8"-18 x 4 1/2" Hex Bolt	Lower Strut Rod
29	2	99622006	5/8"-18 Thin Nylok Nut	Lower Strut Rod
40	4	99623001	5/8" Flat Washer	Lower Strut Rod
41	2	99621003	5/8"-18 x 2 3/4" Hex Bolt	Rear Cradle To Car - Rear Heim

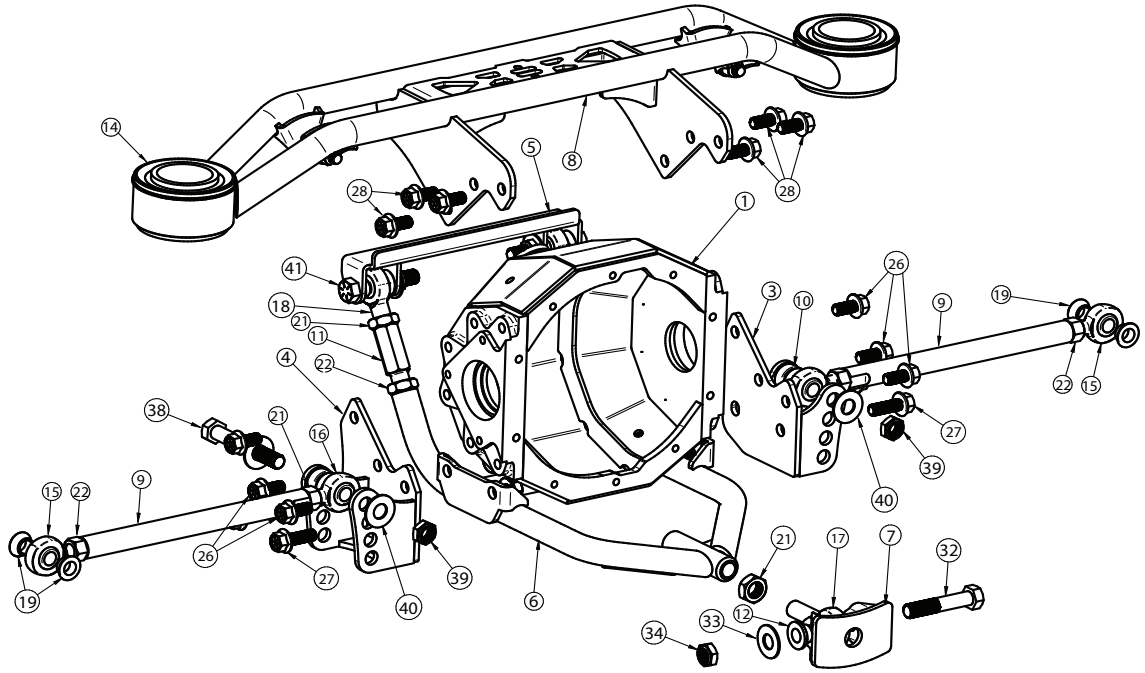

Disassembly and Pinion Support Removal

Congratulations on your purchase of the Ridetech Corvette 9" Conversion. This setup has been designed to make your Corvette differential withstand the abuse of autocrossing and high performance driving events. The Camber Rod Inner Mount has multiple positions to help optimize the rear camber.

Note: For the best performance this kit is designed to be used with the Ridetech Rear StrongArm System.

1. Raise the vehicle to a safe and comfortable working height. Cutting and Welding is required to install this kit. Also, some fiberglass cutting and repair is necessary to provide clearance for the new center section.

2. Disassemble the rear suspension. Remove the center section, half shafts, strut rods, and upper crossmember.

3. If doing a Conversion to the Ridetech StrongArm System or other CoilOver kits, the trailing arms can remain in the car. If doing a Complete StrongArm System with the 9" Conversion, remove the OEM Hub setup from the OEM trailing arms and assemble in the Ridetech Trailing Arms.

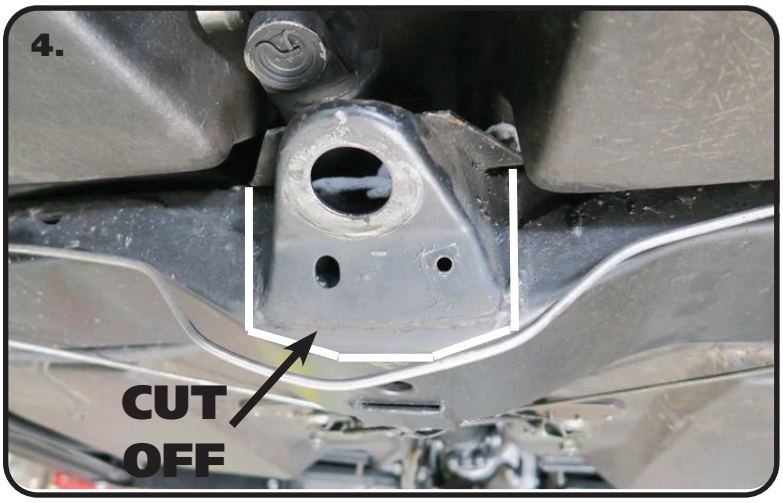

4. The Pinion Support will need to be removed from the Crossmember. Remove the entire mount and flanges leaving a smooth surface. The cross member needs to be smooth when you are finished removing the mount. Depending on how your brake lines are ran, you may need to remove the line or move it out of the way. You will be welding on this area.

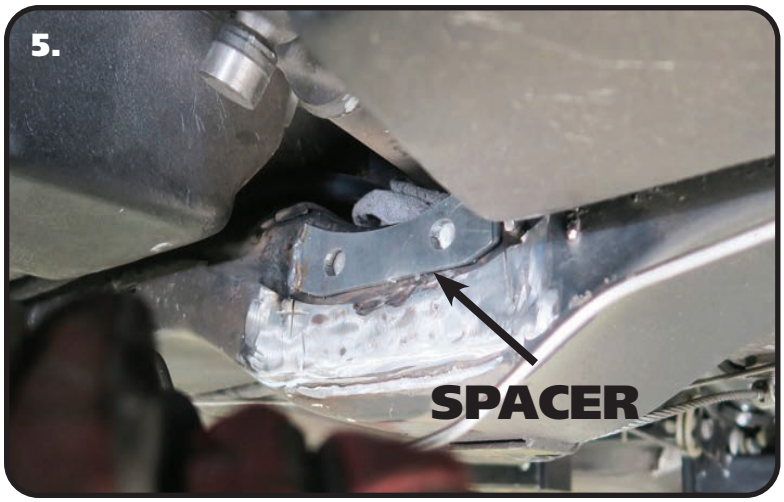

5. Weld in the Front Bracket Spacer. After the pinion mount is cut off, the crossmember has a step in it making the mounting area uneven. Supplied in the kit is a Front Bracket Spacer to help make this area even. The Spacer is shaped similar to the frame. Put the Spacer in position and mark the outer edges on the crossmember. Clean the paint off where you have marked to get a clean weld area. Put the spacer back into position and weld it to the cross member. Weld up the 2 holes too. After welding, grind off any high spots.

C2 Modifications

C2 Modifications

STEPS 6 & 7 ARE C2 ONLY! IF YOU ARE WORKING ON A C3 SKIP TO STEP 8.

6. Clearance for the housing will need to be made at the rear of the tunnel. Be sure to look on the inside of the Well before cutting. We fiberglassed the opening to close it up.

7. Install the Center Section into the Housing using 3/8"- 24 Nylok Nuts on the Studs and 3/8"-24 x 1 1/4" Bolts in the top (5) holes. **Install a Copper Washer under each Nut & under each Bolt Head.** If you are using a Center Section that has the gussets made into the casting, you may need to clearance the upper gusset similar to **Image 7**. This will keep if from rubbing on the floor of the car.

SKIP TO STEP 10!

C3 Modifications & Lower Cradle Assembly

STEPS 8 & 9 ARE C3 ONLY!

8. The inside rear corner of the Battery Well will need to be notched and repaired. We notched it 1 1/2" each direction, to the front & toward the outside of the car and 5" bottom to top. Be sure to look on the inside of the Well before cutting. We fiberglassed the opening to close it up.

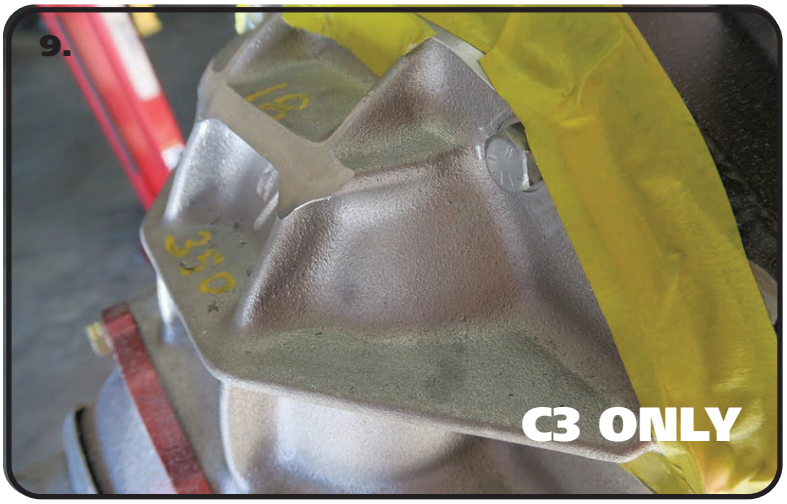

9. Install the Center Section into the Housing using 3/8"- 24 Nylok Nuts on the Studs and 3/8"-24 x 1 1/4" Bolts in the top (5) holes. **Install a Copper Washer under each Nut & under each Bolt Head.** If you are using a Center Section that has the gussets made into the casting, you may need to clearance the upper gusset similar to **Image 9**. This will keep if from rubbing on the floor of the car.

THE FOLLOWING STEPS ARE FOR C2 & C3.

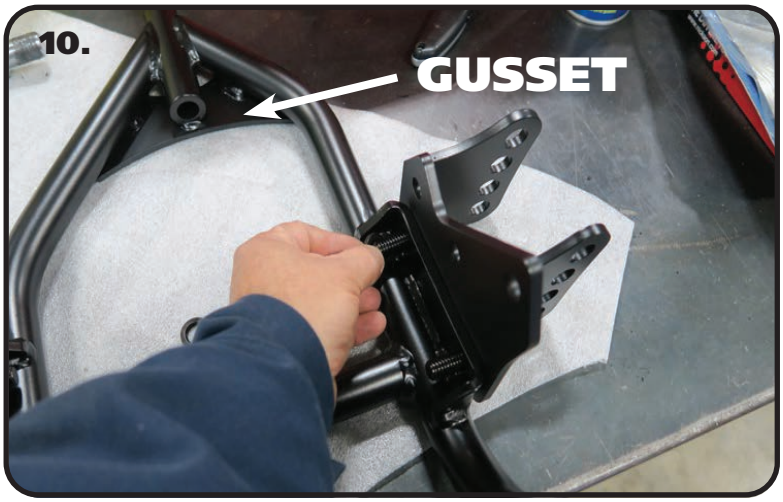

10. Attach the Strut Rod Mounts to the Cradle. To assemble, lay the Cradle on a surface with the bends pointing up and the front Gusset DOWN. There's a Driver and Passenger Strut Rod Mount. Reference **Image 7** and install the Strut Rods Mounts with the SHORT side of the V toward the Gusset. These attach to the 2 hole mounting tabs on the sides of the Cradle. Attach the Mounts with (2) 1/2"-13 x 1 1/2" Hex Bolts and (2) 1/2"-13 Nylok Nuts on each mount. DO NOT Tighten the hardware yet.

Lower Cradle & Crossmember Assembly

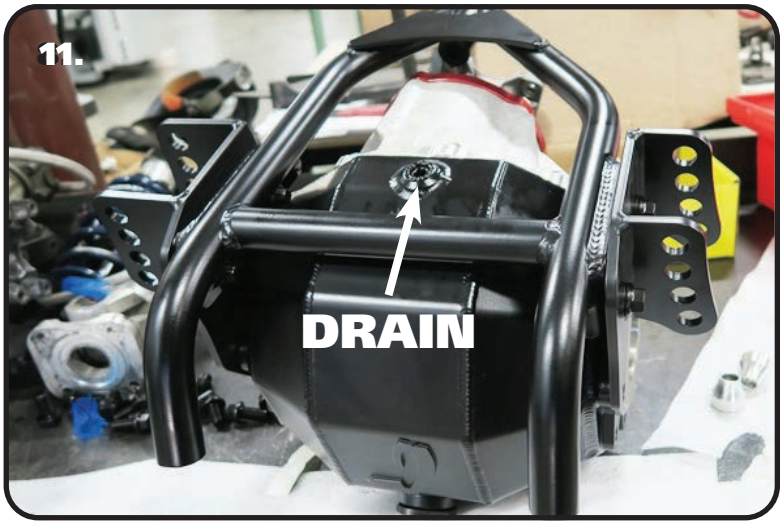

11. With the Center Section mounted in the Housing, attach the Cradle to the Housing. This is easiest done by flipping the Housing over with the drain sticking up. With the Housing flipped over, slip the Cradle on it aligning the 3 holes on each side. The Housing should nest down in the V of the Strut Rod Mounts. The Cradle attaches with (3) 1/2"-13 x 3/4" Hex Bolts on each side.

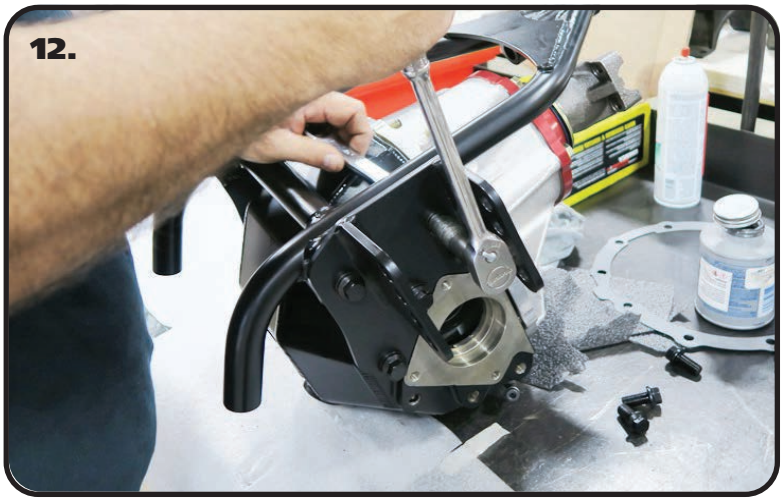

12. Apply Loctite on the threads of the 1/2"-13 x 3/4" Hex Bolts and thread them into the (6) holes. Install all (6) Bolts before tightening any of them. Torque these (6) bolts to 55 ftlbs. Once the housing bolts are tight, torque the (4) Strut Rod Mount Bolts/Nuts to 75 ftlbs.

Bolt Torques:
Housing Bolts - 55 ftlbs
Strut Rod Mount Bolts - 75 ftlbs

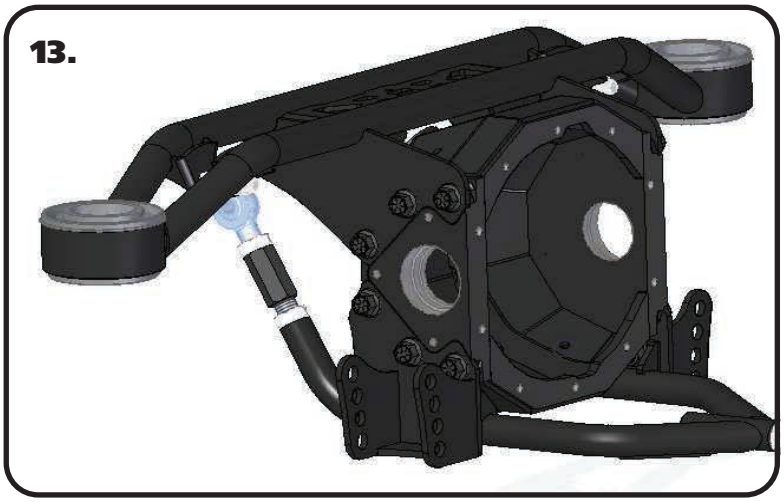

13. Flip the Housing/Cradle Assembly over to set the Cradle on a flat surface with the Housing up. Slide the Crossmember onto the Housing nesting the V of the Crossmember on the V of the housing.

Heim End & Crossmember Installation

14. The Crossmember attaches with (6) 1/2"-13 x 3/4" Hex Bolts. Line up the (6) holes in the Crossmember with the threaded holes of the housing. Apply Loctite to the threads of the Bolts and thread them into the holes. Torque the Bolts to 55 ftlbs.

Housing Bolts - 55 ftlbs

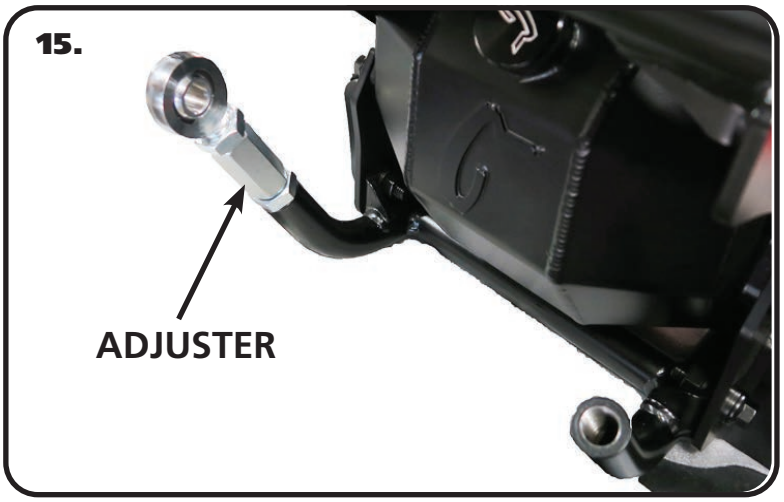

15. Thread a 3/4"-16 LEFT HAND Nut on each of the (2) Left Hand 3/4" Heim Ends. Thread a 3/4"-16 RH Nut on the threads of the Double Adjuster. The Double Adjuster has a 3/4"-16 LH Female thread and a 3/4"-16 RH Male thread. Bottom the Nuts out on the Adjusters and Heims. Apply Antisieze to the threads of the Heims and thread them into the Adjusters. Thread the Heims into the Adjusters until they stop turning. Once they stop, DO NOT try to force them in further. Apply Antisieze to the threads of the Adjusters and thread them into the rear legs of the Cradle. Again, thread them in until they stop. DO NOT Tighten the Jam Nuts at this time.

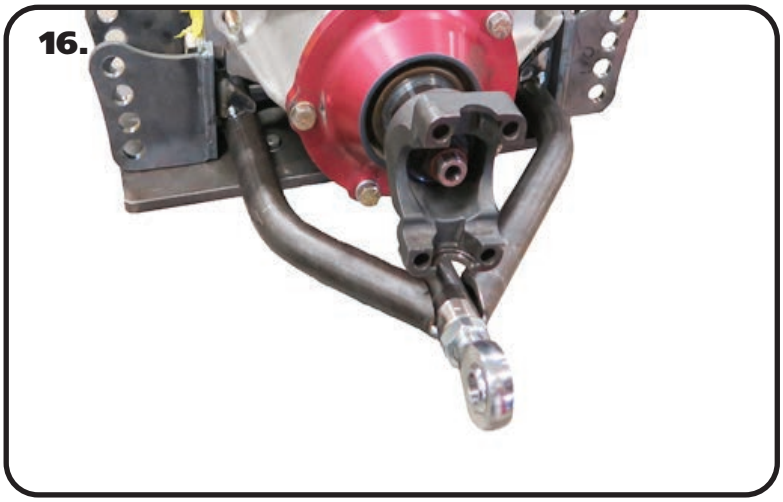

16. Install a 3/4"-16 Jam Nut on the 3/4" RH Heim. Thread the Nut all the way until it stops. Apply Antisieze on the threads of the Heim End and thread it into the FRONT of the Cradle. Thread the Heim all the way in until it stops. Loosen the Heim enough to get the hole horizontal. Leave the Heim loose.

Rear & Front Cradle Mount Installation

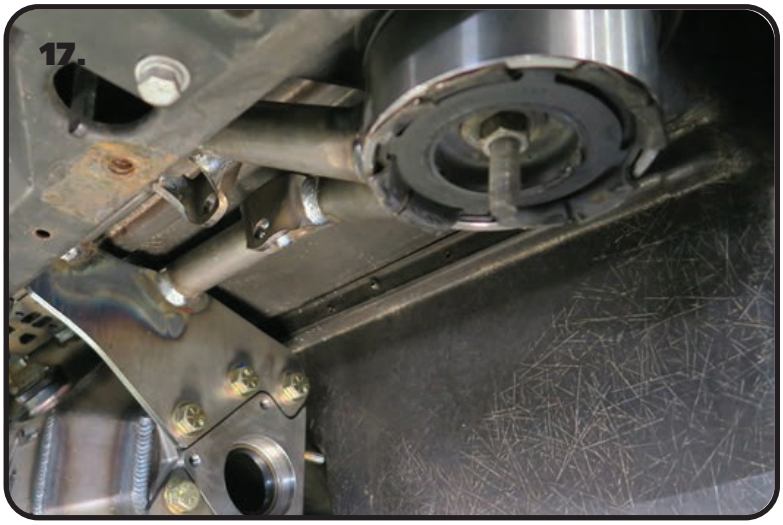

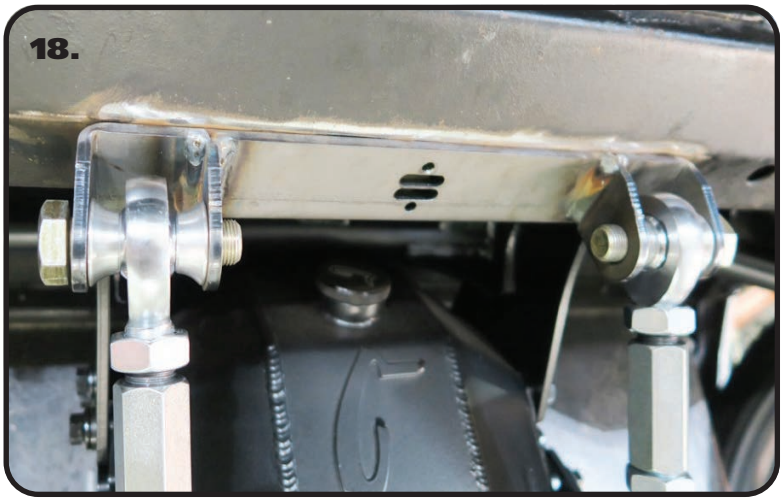

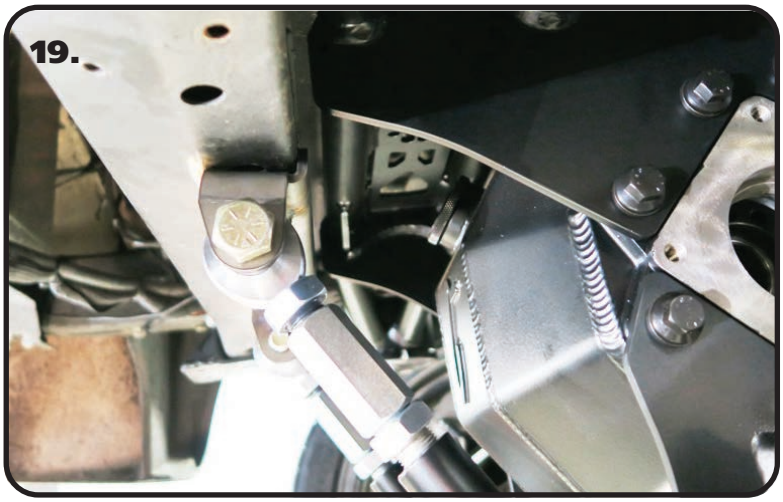

15. Install a 7/16" x 3" Stud in each of the threaded holes in the Frame for the Crossmember bushings. The Studs have fine threads on one end and coarse threads on the other. **The coarse thread is threaded into the car frame**. With the Studs in place, raise the Crossmember/Housing Assembly in place. This can be done with a jack under the Cradle. Once the Crossmember is in place, install a 7/16" Flat Washer & 7/16"-20 Nylok Nut on each Stud and tighten to 50 ftlbs. Leave the jack in position under the Cradle putting pressure on the assembly until the Mounts are installed.

16. Using **Images 17 & 18** as a reference, install the Rear Crossmember Bracket onto the Heim Ends. Insert a 90002168 (7/16" Thick) Spacer on each side of the Heims with a 5/8"-18 x 3 1/4" Hex Bolt through them. It isn't necessary to install the Nylok Nut yet as we recommend removing the Crossmember/Housing Assembly for final welding.

17. The front edge of the Mount has a tab that goes up along the front edge of the OEM crossmember. At this point you will need to set your pinion angle before adjusting the rear adjusters. Refer to Page 9 for information on pinion angle. Use the jack that you currently have under the Cradle to assist you. Once you have the pinion angle set, slip the drive shaft in place to check clearances around the drive shaft. Don't attach it yet. With the pinion angle set and the drive shaft clearance checked, adjust the Heim Adjusters out to get the Bracket fitting the crossmember properly. When adjusting them, adjust them evenly. Adjust heim until you get the best fit on the crossmember. Tack weld it in place in several spots.

Setting Pinion Angle

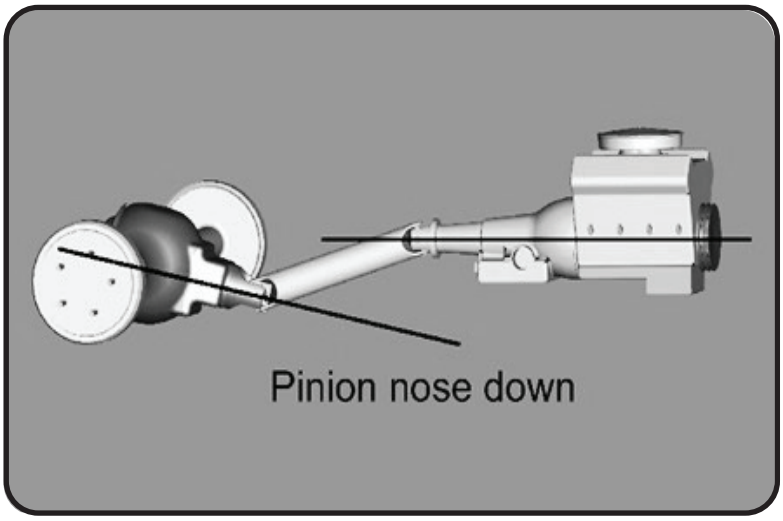

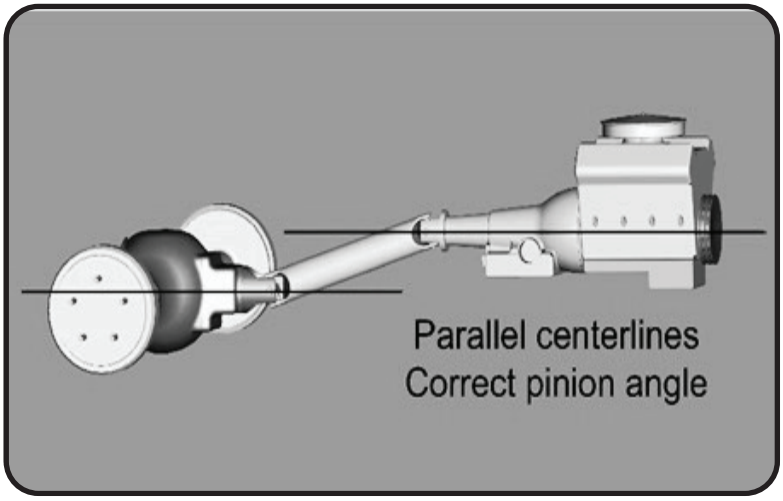

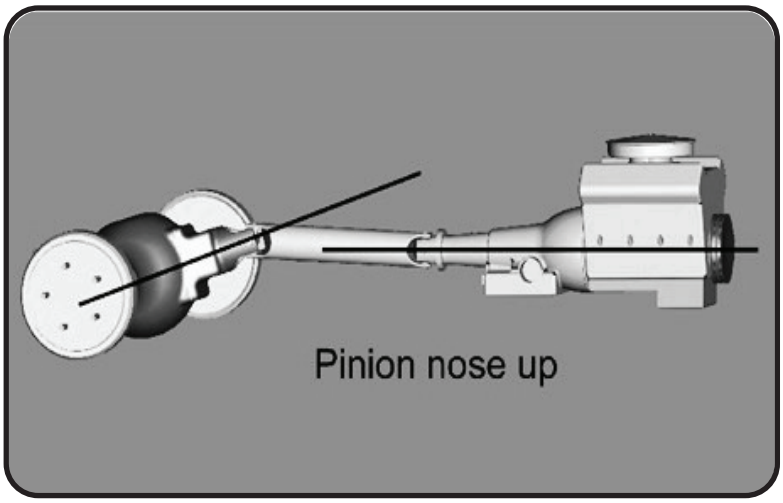

How do you set the pinion angle? On a single-piece shaft you want to set it up where a line drawn through the center of the engine crankshaft or output shaft of the transmission and a line drawn through the center of the pinion are parallel to each other but not the same line.

A simple way to do this is to place a digital angle finder or dial level on the front face of the lower engine pulley or harmonic balancer. This will give you a reading that is 90 degrees to the crank or output shaft unless you have real problems with your balancer. At the other end, you can place the same level or angle finder against the front face of the pinion yoke that is also at 90 degrees to the center line. If you rotate the yoke up or down so both angles match, you have perfect alignment.

Road testing will tell you if you have it right. If you accelerate and you get or increase a vibration, then the pinion yoke is too HIGH. Rotate it downward in small increments of a degree or two until the problem goes away. If you get or increase a vibration when decelerating, then the pinion yoke is too LOW. Rotate it upward to correct it.

Mount Welding & Camber Rod Assembly

20. The Front Mount uses a 90002583 (9/16" Thick) on each side of the heim with a 5/8"-18 x 3 1/4" bolt and Nylok Nut. The Front Mount fits in the area that the pinion support was cut off of. The Heim will need to be adjusted out to get the front mount sitting tight against the crossmember. Once you have it tight against the crossmember, tack weld it in place. Do Not fully weld yet.

21. After the Front & Rear Mounts are tack welded in place, remove the Crossmember/ Housing Assembly and fully weld the Front & Rear Mounts. Both Mounts will need to be welded around the entire mount. **Image 21** shows the rear mount fully welded. Once the welds are cool you can paint the welded areas.

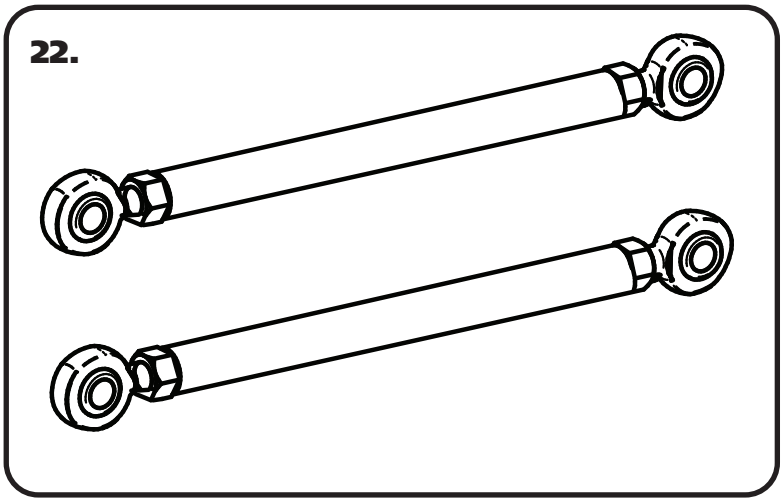

22. If the Camber Rods aren't already assembled, assemble them with a Jam Nut on each Heim End. The Camber Rods use a Left Hand Threaded Heim End on one end with a Right Hand Thread Heim End on the other. Apply Antisieze to the threads of the Heims and thread them into the Camber Rod. Thread the Heims all the way in. With them threaded all the way in, when you adjust them out the heims will be threaded in equally on each end.

Half Shaft & Camber Rod Installation

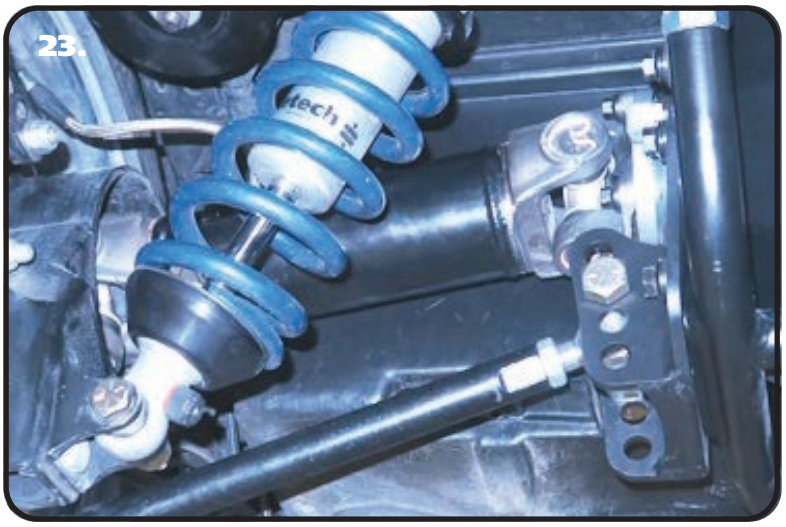

23. Install the Half Shafts. The Half Shafts are attached to the Center Section Stub Axles with (4) 7/16"-20 x 1" Hex Bolts with a Nord-Lock Washer on each bolt. The Half Shaft Outer Flange is attached to the Hub with (4) 716"-20 x 1 1/4" Hex Bolts with a Nord-Lock Washer on each Bolt. Torque to 80 ftlbs.

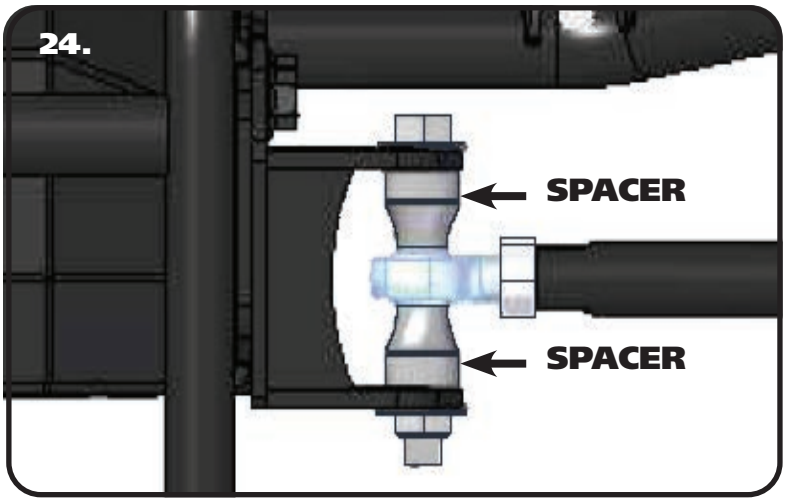

24. Install the Camber Rod. The Camber rod is installed in the 2nd hole from the TOP on the Cradle Bracket. The Camber Rod uses (2) 70013541 (1.320" Long) Spacers, one in each side of the R-Joint End to attach to the Cradle Bracket. The Small diameter of the Spacer goes into the R-Joint. Attach the Inner Camber Rod Heim w a 5/8"-18 x 4 1/2" Bolt and Nylok Nut with a 5/8" Flat Washer on each side of the Bracket.

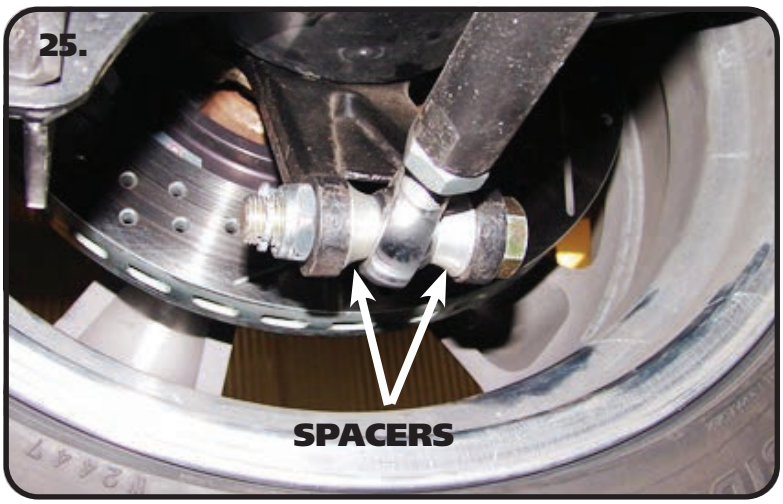

25. The Outer end of the Camber Rod is attached to the OEM Location with (2) 70013545 (9/16" Long) Spacer, one in each side of the R-Joint. Use the Hardware supplied in your existing suspension kit.