350 S. St. Charles St. Jasper, In. 47546
Ph. 812.482.2932 Fax 812.634.6632
www.ridetech.com

12171010
97-03 F150 Front CoolRide Kit

Components:

2	90006781	6.5” Dia. Front airsprings
2	90000021	Upper airspring mounts
1	90000336	Driver Lower airspring mount
1	90000337	Pass lower airspring mount
2	90001082	Short bumpstops (these replace the factory bumpstops)

Hardware:

2	99435002	7/16 x 8 studs	upper airspring bracket mounting
2	99433002	7/16 sae flat washers	upper airspring bracket mounting
2	99432001	7/16 uss nylocs	upper airspring bracket mounting
8	99372002	3/8 uss nyloc nuts	airspring to upper mount / lower plate to a-arm
2	99371001	3/8 x 3/4 uss bolts	airspring lower mounting
4	99371004	3/8 x 1 1/4 uss bolts	lower plate to a-arm
2	99373005	3/8 lock washers	airspring lower mounting
14	99373003	3/8 flat washers	airspring to bracket / lower bracket to a-arm
2	99311001	5/16 x 1 bolts	relocate brake line forward on A-arm
2	99313003	5/16 sae flat washers	
2	99312003	5/16 uss nylocs	

Shock:

2	986-10-036	4.75” Stroke Eye Top Shock Cartridge
4	70011138	¾” ID Shock Bushing
2	90002102	1/2” ID Inner Sleeve
2	90002103	5/8” ID Inner Sleeve

Components:

2	90001617	5/8” shock studs
2	90000200	Upper shock mounting brace
2	90000034	Upper shock mounts

Hardware:

2	99432001	7/16 uss nylocs	Upper Shock Bracket to brace
4	99433002	7/16 Flatwashers	Upper Shock Bracket to brace
2	99431002	7/16 x 1 1/4 bolts	Upper Shock Bracket to brace
2	99501003	½” x 2 ½” USS bolt	Shock to upper bracket
2	99502001	½” USS Nylok nut	Shock to upper bracket
4	99372001	3/8 uss nyloc nuts	Upper Shock Mount
4	99371004	3/8 x 1 1/4 uss bolts	Upper Shock Mount
8	99373003	3/8 Flatwashers	Upper Shock Mount
2	99311001	5/16 x 1 bolts	Brake line relocation
2	99313002	5/16 sae flat washers	Brake line relocation
2	99312003	5/16 uss nylocs	Brake line relocation

350 S. St. Charles St. Jasper, In. 47546
Ph. 812.482.2932 Fax 812.634.6632
www.ridetech.com

CoolRide Installation Instructions

97 to present Ford F150

Front airspring system installation

1. Raise vehicle to a comfortable working height and support by the frame.
2. Remove coilsprings. Refer to factory shop manual for proper procedure.

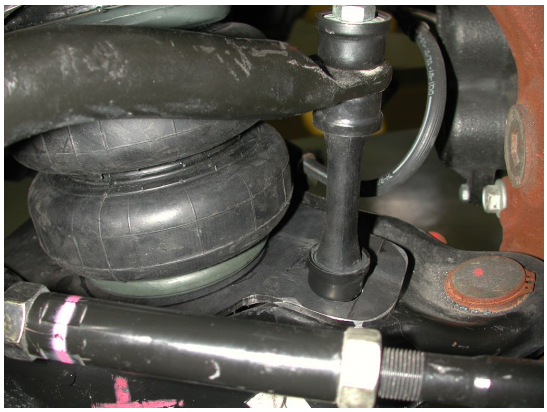

3. Fit the lower airspring plate into the lower control arm. This plate will be positioned by the oem swaybar hole. The remaining attachment holes will need to be drilled into the control arm using the plate as a template.

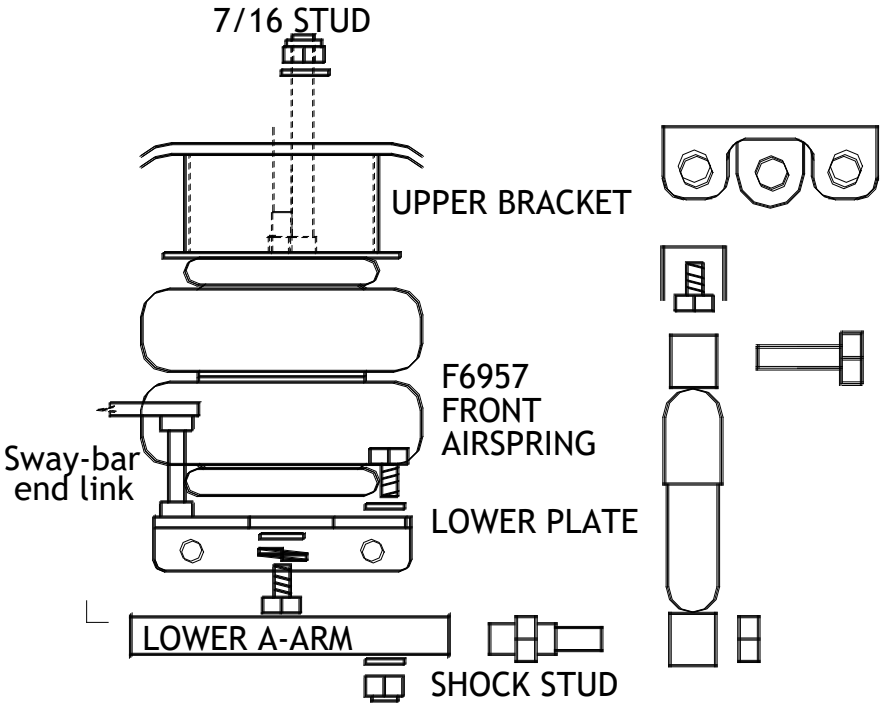

4. When the attachment holes are finished, assemble the airsprings onto their brackets and install the airline fitting [see sketch to the left]. Be sure to use Teflon tape or paste to prevent air leaks.
5. Install the airspring/bracket assembly into the oem coilspring location. A supplied threaded stud, stepped washer, and nyloc nut will attach the upper cup and supplied bolts will fasten the lower control arm plate.

VEHICLE MUST BE ALIGNED BEFORE DRIVING
After finishing the installation, please double check the clearance around each airspring through the entire wheel travel and the steering travel. Be sure to check for proper tire clearance and for proper ground clearance throughout the entire suspension movement. Take the vehicle for a short test drive and check it again.

REMEMBER:

THE AIRSPRING BELLOWS MUST NOT TOUCH ANY THING AT ANYTIME!

Shock Installation

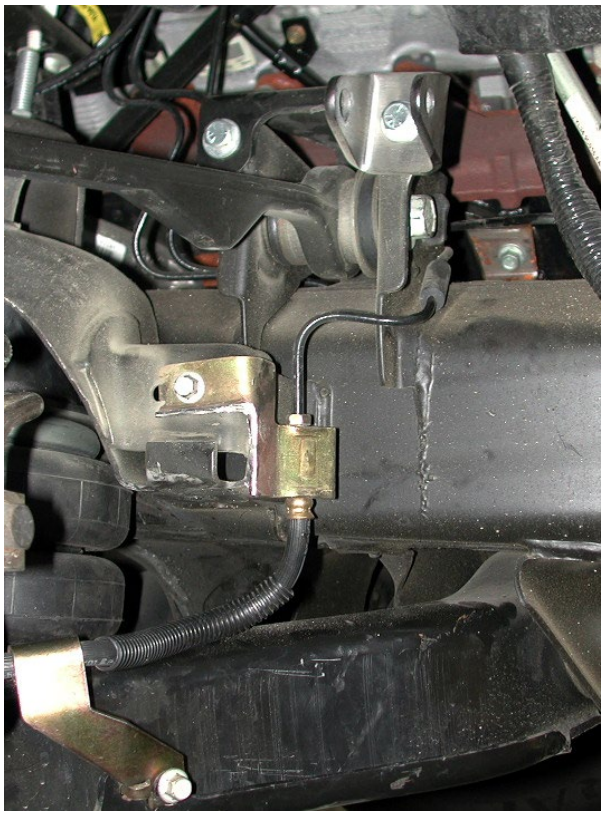

1. Install the upper shock mount and brace assembly onto the rear upper control frame bracket. Do not tighten the shock bracket bolt until the shocks are actually installed to set the final angle of that bracket.

Note: The brake line bracket may need to be trimmed for shock clearance.

Shock Dimensions:

Compressed:	10 1/8”
Extended:	14 7/8”

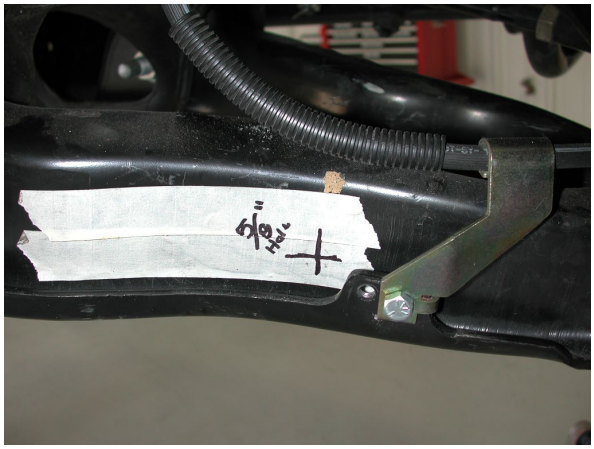

2. The bottom of the shock is attached to the rear of the lower control arm slightly inboard of the bracket tab shown to the left. A 5/8” hole is needed to install the provided shock stud. Check you tire clearance closely before selecting the final location for this stud. After the stud and shock are installed, the upper bracket may be final tightened.

Shock adjustment 101- **Single Adjustable**

Rebound Adjustment:
How to adjust your new shocks.
The rebound adjustment knob is located on the top of the shock absorber protruding from the eyelet or stud top.
You must first begin at the ZERO setting, then set the shock to a street setting of 12.

-Begin with the shocks adjusted to the ZERO rebound position (full stiff). Do this by rotating the rebound adjuster knob clockwise until it stops.

-Now turn the rebound adjuster knob counter clock wise 12 clicks. This sets the shock at 12. (settings 21-24 are typically too soft for street use).

Take the vehicle for a test drive.

-if you are satisfied with the ride quality, do not do anything, you are set!

-if the ride quality is too soft increase the damping effect by rotating the rebound knob clock wise 3 clicks.

Take the vehicle for another test drive.

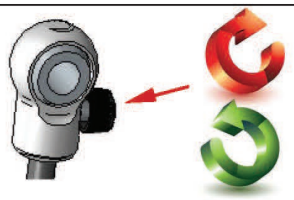

-if the vehicle is too soft increase the damping effect by rotating the rebound knob clock wise 3 additional clicks.

-If the vehicle is too stiff rotate the rebound adjustment knob counter clock wise 2 clicks and you are set!

Take the vehicle for another test drive and repeat the above steps until the ride quality is satisfactory.

Note:
One end of the vehicle will likely reach the desired setting before the other end. If this happens stop adjusting the satisfied end and keep adjusting the unsatisfied end until the overall ride quality is satisfactory.